White Paper

*Wireless*HART® Power Metering

For Enhanced Energy Management, Equipment Reliability

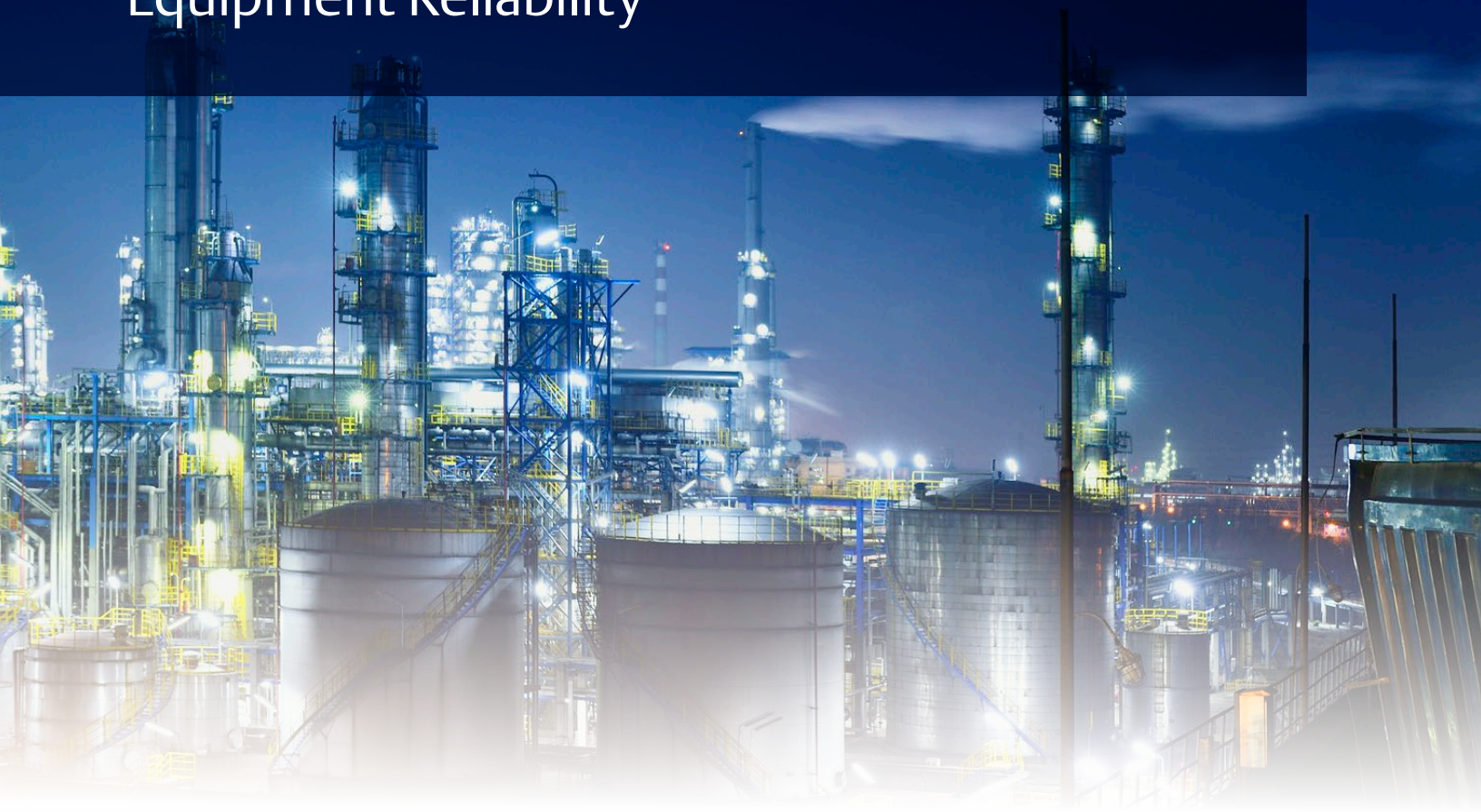

EMERSON™

*Wireless*HART® Power Metering for Enhanced Energy Management, Equipment Reliability

Abstract

World's first *Wireless*HART power meter addresses limitations with wired meters for faster and simpler implementation with less required maintenance.

Introduction

Traditional "wired" power meters have been available for many years and have been widely used in a variety of industries to diagnose equipment problems, and to monitor power consumption. Wired meters are hampered because they typically need a source of operating power, and they must be hardwired to the control and monitoring system. This limits installation points and increases deployment and maintenance costs.

Figure 1. Wireless Power Meters

A *Wireless*HART power meter has no similar limitations, and can therefore be installed where it's needed to monitor power consumption (Figure 1). Operating power for the *Wireless*HART power meter is scavenged from the electrical supply to the equipment being monitored, eliminating the need for a separate source of power. Data regarding

power use including current, voltage, instantaneous power demand, and consumption—as well as and other parameters such as diagnostics and status—is transmitted to control and monitoring systems via a wireless mesh network, eliminating the need for wired infrastructure, along with its installation and maintenance costs.

In this white paper, we'll discuss how monitoring power use can improve energy management and equipment reliability, describe the power meter and the wireless network to which it connects in detail, and provide examples showing how companies are using the *Wireless*HART power meter to improve their operations.

Enhancing energy management

Industrial companies worldwide must closely monitor their energy consumption. This is done to cut ever-rising energy costs, and often to comply with energy reduction regulations. Two of the most important regulations are the European Energy Efficiency Directive, which calls for companies to increase efficiency by 20 percent, and the Better Plants program of the U.S. Department of Energy, which asks companies to reduce their energy intensity by 25 percent over a 10-year period.

Engineers can determine which motors are not operating per design by monitoring power consumption for electrically-driven equipment such as pumps, compressors, and fans. These findings can reveal a host of areas for improvement—for example, by adding a variable frequency drive (VFD) to match motor operation to the load.

In a typical industrial plant or facility, many motors run at full capacity, with their output throttled by valves or dampers. This wastes energy, increases required maintenance because the throttling devices contain moving parts and wear out, and makes the constant speed motor work harder to overcome the throttling.

Using VFDs to cut energy use is particularly important for centrifugal pumps where the power usage increases dramatically as the loading increase. Pumps consume more motor energy than any other type of rotating equipment in plants. A Finnish Research Center study of centrifugal pump performance found average pumping efficiency was less than 40% for the 1,690 pumps reviewed in 20 different plants across all market segments. The study also revealed 10% of the pumps were operating at less than 10% hydraulic efficiency.[(1)]

As seen in Table 1, upgrading a pump installation with a constant speed motor and a throttling valve to VFD speed control is the best solution for saving energy with pumps, and it also cuts maintenance costs.

1 Chemical Processing

Table 1. VFDs Versus Throttling Valves

Action	Energy Savings %
Replace throttling valves with speed controls	10 - 60
Reduce speed for fixed load	5 - 40
Install parallel system for highly variable loads	10 - 30
Equalize flow over product cycle using surge vessels	10 - 20
Replace motor with more efficient model	1 - 3
Replace pump with more efficient model	1 - 2

A *Wireless*HART power meter can quickly determine if a VFD is needed for a pump system. Monitoring the pump motor's power consumption for a few weeks can identify pumps being overloaded, as well as those running inefficiently.

Electric utilities are putting increasing pressure on their industrial customers to manage their power consumption to limit peak demand. Utilities use a twofold approach to accomplish this: 1 - penalizing customers for exceeding peak demand, and 2 - rewarding customers for limiting power usage upon request from the utility.

Meeting either of these goals requires continuous monitoring of power use, both at the plant and equipment level. This is particularly true for equipment using lots of power, such as large pumps and motors.

The peak demand charge is based on the highest capacity a plant requires during its billing cycle. Demand charges can be steep. For example, a company might pay $0.04 per kWh for the total amount of electric power used, but its demand charge could be $2.79 per kW. If it runs a 50MW load for 100 hours, its demand charge will be $139,500.

If engineers know the plant is consuming a great deal of power, they can employ load-shedding or peak-shaving techniques to shut off certain items of equipment to cut power. *Wireless*HART power meters can monitor power consumption in various key areas of a plant so engineers can determine which items of equipment can be shut down or not started to reduce peak energy use.

The plant can also participate in the utility's electrical curtailment program. In these programs, the utility warns the plant that it needs to cut power by a certain amount, either immediately or within a few hours. When the plant complies, it gets a reduction in its electric bill. With *Wireless*HART power meters monitoring consumption, the plant engineer can determine which equipment to shut down.

Improving equipment reliability

When motor-driven equipment fails, it can shut down a plant. Many motor problems can be detected by monitoring its electrical power consumption, particularly by plotting energy usage over time to draw comparisons with baseline consumption when

the motor is known to be operating properly. Some of the problems that can often be detected by monitoring motor power use include:

- Overheating
- Voltage unbalance
- Single-phasing
- Bad motor bearings
- Deteriorating motor windings
- Motor mounting issues
- Overloads

An overheated motor works to maintain its rated power by drawing more current. In some cases, this may trip a circuit breaker but many industrial motors have a service factor of 1.15, meaning they can safely run at up to 115 percent of their rated horsepower. Monitoring a motor's power consumption can detect any increases in current draw and provide alerts to plant personnel.

A voltage unbalance occurs when the voltage between all three phases differs by more than one percent. When this happens, the current increases dramatically in the motor windings, which eventually damages the motor. A *Wireless*HART power meter can detect voltage unbalance, allowing quick remedial response.

Single-phasing occurs when a fuse blows, or when a protective device opens on one phase of the motor. A three-phase motor will continue to operate in single phase, but it will draw about 2.4 times more current. Again, a *Wireless*HART power meter can detect the increase in current draw. When plant personnel are alerted to motor problems on data provided by a power meter, they can investigate to determine the cause, such as bad motor bearings, deteriorating motor windings, motor mounting issues, overloads, or a blown fuse.

Process problems, such as those listed below, can be detected by monitoring electrical power consumption, for either a single item of equipment, or a group:

- Uneven power use among a group of items of equipment that should be equally loaded
- Power use in excess of expected values based on production levels
- Failure of motor/driven load to operate at required levels
- Early indication of equipment failures

For example, parallel pumps and compressors are often used in process plants, where two or more identical devices are piped from the same source to the same outlet. By monitoring power consumption, maintenance can quickly identify when one device is having mechanical problems.

Baseline power consumption can be established for all motor-driven devices such as pumps, compressors, agitators, conveyors, etc. By monitoring the power consumption

of these devices and comparing current consumption to the baseline, process problems can be detected before they cause equipment damage or failure.

Although increased power consumption doesn't always identify the root cause of the problem, it can point plant personnel in the right direction. With a little experience, plant personnel will learn, for example, that when the power consumption increases on the agitator in a batch reactor, it probably means a crust has formed.

Power meter design details

The more advanced *Wireless*HART power meter is designed to monitor voltage, current, power, energy and other electrical parameters on single-and three-phase electrical systems with revenue-grade accuracy. The *Wireless*HART power meter provides monitoring of energy data to avoid equipment downtime and increase efficiency.

It directly measures volts, amps, and power factor. It calculates kW, kWh, kVAR, kVARh, kVA, kVAh, etc. These measurements are made with voltage taps and current transformers (CTs) on each phase conductor of the equipment.

Accuracy is 0.2 percent, meeting the requirements of ANSI C12 .20-2010 class 0.2 for revenue-grade accuracy.

The *Wireless*HART power meter scavenges line power, so it does not require an external source of power. It uses voltage output CTs with a 0-333mV output. This is much safer than current output CTs, which are typically 0-5 amps, but can spike much higher.

It measures a 600Vac line-to-line voltage input, and uses potential transformers (PTs) above this level—for example, on medium voltage 4160V switchgear. The *Wireless*HART power meter can be installed at substations, switchgear, MCCs, or at the power feeds to motors driving major items of equipment (as seen in Figure 2).

Figure 2. Installed Power Meter

The *Wireless*HART power meter provides 16 application alarms, and approximately 40 standard diagnostic and status values. This data is communicated to the host control and monitoring systems via *Wireless*HART.

The *Wireless*HART power meter works with any *Wireless*HART gateway, and any software capable of accepting HART information. For example, data from the WirelessHART power meter can be easily integrated into Emerson's DeltaV™, AMS, and Plantweb™ Alerts software. (Figure 3.)

Figure 3. Processed Wireless Power Meter Data

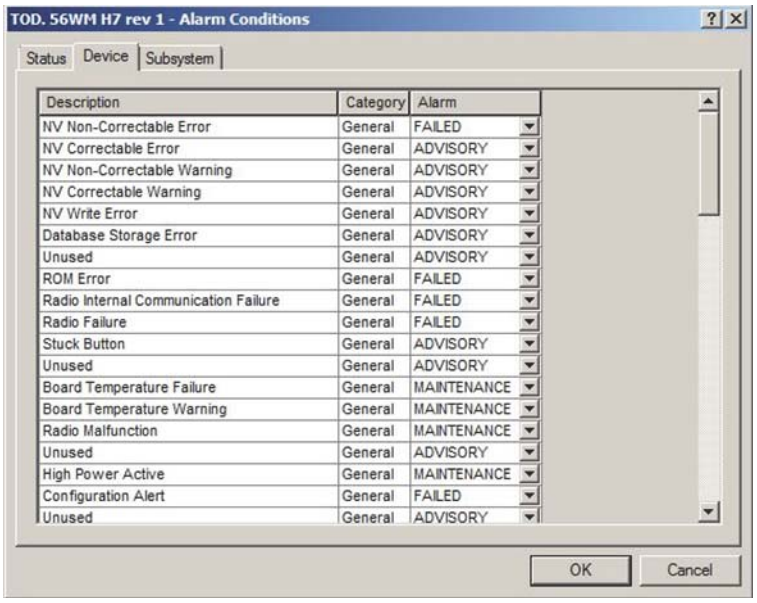

Description	Category	Alarm
NV Non-Correctable Error	General	FAILED
NV Correctable Error	General	ADVISORY
NV Non-Correctable Warning	General	ADVISORY
NV Correctable Warning	General	ADVISORY
NV Write Error	General	ADVISORY
Database Storage Error	General	ADVISORY
Unused	General	ADVISORY
ROM Error	General	FAILED
Radio Internal Communication Failure	General	FAILED
Radio Failure	General	FAILED
Stuck Button	General	ADVISORY
Unused	General	ADVISORY
Board Temperature Failure	General	MAINTENANCE
Board Temperature Warning	General	MAINTENANCE
Radio Malfunction	General	MAINTENANCE
Unused	General	ADVISORY
High Power Active	General	MAINTENANCE
Configuration Alert	General	FAILED
Unused	General	ADVISORY

Wired versus wireless considerations

Installing a wired power meter can be quite expensive and time consuming. The meter must be wired to the control and monitoring system, usually via Ethernet. If the existing Ethernet network is at capacity, which is often the case, new wiring must be installed back to the control and monitoring system. In some cases, adding a single wired power meter can cost $15,000 or more in labor, materials, new wiring, etc. The meter must also be supplied with an independent source of operating power, typically 24Vdc or 120Vac.

By contrast, installing a new *Wireless*HART power meter is simple and very inexpensive, and can be done for one-third to one-fifth the cost of a wired power meter. No operating power is required because the meter scavenges power from the motor or other load it is monitoring. This provides the utmost in reliability in terms of operating power because the meter is powered whenever its monitored load is active.

If there is an existing *Wireless*HART network, which is the case in many industrial plants and facilities, the meter simply joins and strengthens the existing network. If a new *Wireless*HART network is required, it can be quickly and inexpensively installed as described in the next section.

Description and Benefits of *Wireless*HART networks

*Wireless*HART has been the leading industry standard for wireless communications since its introduction about 10 years ago. It is supported by dozens of vendors and administered by the independent FieldComm Group organization. Emerson alone has nearly 30,000 wireless networks installed, with more than 8 billion hours of operation.

One major reason for its success is that *Wireless*HART is a self-configuring and self-healing mesh network (Figure 4 on page 7). Reliability improves as more devices are added because each can act as a repeater. No line of sight is required, as with some other wireless networks, making installation simple and easy.

Figure 4. *Wireless*HART Mesh Network

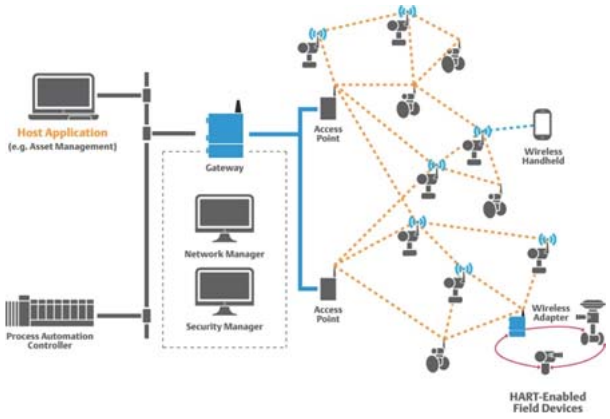

Installation of a *Wireless*HART power meter takes anywhere from 10 minutes to a few hours, depending on where the meter is mounted. Installation requires:

1. Mount the meter in an enclosure near the measuring point.
2. Install the CTs at the measuring point.
3. Wire the CTs to the meter.
4. Wire the measuring point connections to the meter.
5. Enter the wireless network credentials.

The meter will begin transmitting wirelessly to the mesh network and within a few minutes will be accepted by the system. The power meters connect to a Gateway, which is hardwired to one or more host control and monitoring systems.

Typical applications

Thanks to *Wireless*HART, power meters can be installed quickly on any piece of equipment to monitor power consumption, as shown in the examples below.

Monitoring compressor efficiency

The Commercial Metals Company (CMC) in South Carolina joined the U.S. Department of Energy Better Plants program in 2012, and has been undertaking many energy monitoring and efficiency projects. The energy efficiency efforts included installing a *Wireless*HART instrumentation infrastructure at its South Carolina Steel Mill.

*Wireless*HART power meters were installed to monitor electricity consumption on three compressors to understand and resolve an unstable air supply issue. The team suspected the backup compressors operated a disproportional amount of time to maintain system pressure, but they had no recorded data to confirm their suspicions. In addition, CMC experienced numerous compressor and compressor component failures, as well as downstream equipment failures related to lack of supply air pressure.

The ability to provide data and alert notifications regarding energy use gave CMC's engineers the information required to make better and more actionable decisions. The power meter data indicated one of the compressors was running 80 percent of the time, while the other two combined were only operating 20 percent of the time.

The power meters' data was combined with air pressure trends in the SCADA system to identify additional opportunities for operating improvement. With this insight, CMC balanced the load among all three compressors, enabling the plant to reduce maintenance costs and avoid costly shutdowns.

Cooling towers

Cooling towers present many monitoring problems. Cooling tower instrumentation in many refineries is often old, with many measuring devices out of service. Measurements are difficult because the process environment is corrosive to wiring, mainly due to chemical vapors. As a result, these areas can be poorly instrumented and controlled. Consequently, operations are inefficient, and the towers require a great deal of maintenance and manual operator interaction.

Typically, each refinery process area has a cooling tower, and each tower has six to 12 cells with one or two cooling fans (Figure 5) in each cell. These fans are expensive, and continuous monitoring is critical to prevent failure. At one refinery, it costs an average of $1.6 million per fan in maintenance and repair fees when a fan runs to failure. Refineries don't want cooling tower fans to fail, but they also don't want to over-maintain them, as each time maintenance is performed on a fan the entire cell in the cooling tower must be shut down.

Figure 5. Cooling Tower Fan

One simple solution is to install a *Wireless*HART power meter to monitor the fan motor. When the motor starts to have problems, the power meter will indicate an increase or decrease in the current draw, and specialty software—such as Emerson's Essential Cooling Tower Monitoring Solution—can be programmed to report problems to the plant personnel in plenty of time for maintenance to be scheduled, averting a possible unplanned shutdown.

Shear pin monitoring

A chemical plant was experiencing breakage of grease mixer (Figure 6) shear pins, which shut down their process—and required labor to repair, labor to clear wasted batches, and the loss of dumped batch materials. The plant installed two *Wireless*HART power meters—one on the125hp kettle mixer/impeller and one on the 75 hp kettle mixer/tank scrapper.

Figure 6. Broken Shear Pins

The mixer control system used the power consumption data during mixing operations to decide when to add heat, slow down ingredient mixing, or stop the batch because of improper mixtures. The plant's maintenance department used the power consumption data to schedule preventive maintenance and avoid motor breakdowns.

Energy management program

One of the first steps in reducing energy consumption is determining where power is being used in various areas of a plant. Which equipment or which processes use the most power and when?

One specialty chemicals company (Figure 7) installed *Wireless*HART power meters in the substations powering most of their process facilities to help analyze power needs. The company already had a DeltaV control system and a *Wireless*HART infrastructure in the plant, so installation of the two meters was a simple task.

Figure 7. Chemical Plant with *Wireless*HART Infrastructure

After monitoring power consumption for several weeks and comparing power consumption to process activities, the plant was able to create an energy management program.

Monitoring equipment

In some cases, monitoring substation power doesn't provide enough granularity to improve overall efficiency to the desired degree. So, once large power consuming processes are identified, additional wireless power monitors can be installed to analyze consumption of individual items of equipment. For example, after determining a particular process area was a large energy consumer at a refinery, plant engineers suspected that the principal suspect was a 2.4kV compressor. Installing a *Wireless*HART power meter at the compressor's motor control center confirmed the theory and led to the plant taking measures to correct the problem.

Conclusion

*Emerson Wireless*HART power meters are often the best solution for reducing energy in process and manufacturing plants while minimizing maintenance costs and improving equipment reliability. Thanks to *Wireless*HART, which makes installation of wireless meters quick and easy, Emerson's *Wireless*HART power meter can be used to monitor power consumption on everything from individual motors—such as on cooling tower fans—to entire processes and plants.

The *Wireless*HART power meter can detect equipment problems early, allowing plant personnel to repair or replace malfunctioning equipment before it adversely affects a manufacturing process or system—or fails and causes a shutdown.

Data from *Wireless*HART power meters can be used to analyze a plant's power consumption, identify equipment that can be shut down to reduce power demand charges, and discover which processes or systems are operating inefficiently.

For more information on Emerson's Wireless Power Meters, go to Emerson.com/WirelessPowerMet

North America Contact
Tim VanSlambrouck
1320 South Main Street
Mansfield, OH 44907
+1 419 525 8307
tim.vanslambrouck@emerson.com

Europe Contact
Matt Austin
1320 South Main Street
Mansfield, OH 44907
+1 419 525 8315
matt.austin@emerson.com

Latin America Contact
Bill Stevenson
1320 South Main Street
Mansfield, OH 44907
+1 419 525 8231
william.stevenson@emerson.com

Asia Pacific Contact
Manoj Purohit
Delphi B-Wing, 601-602, 6th Floor, Central Avenue,
Hiranandani Business Park
Mumbai, MH 400076
India
+912266620414
manoj.purohit@emerson.com

Linkedin.com/company/Emerson-Automation-Solutions

Twitter.com/Rosemount_News

Facebook.com/Rosemount

Youtube.com/user/RosemountMeasurement

Google.com/+RosemountMeasurement

00870-0100-4056, Rev AA, September 2017

EMERSON